SERPAC M-8
Electronics Enclosures

NOTES:
1. WHEN MACHINE OR I PLATES MODIFICATIONS ARE REQUIRED, USE THE CENTER OF THE ENCLOSURE TO DIMENSION.

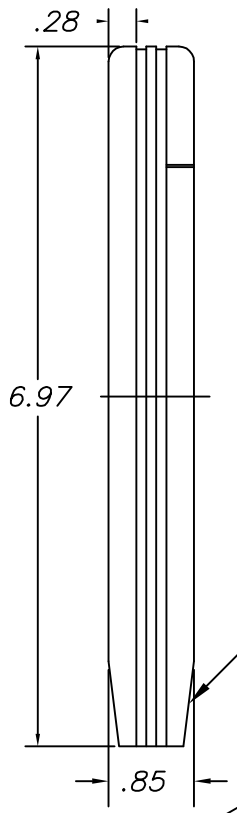

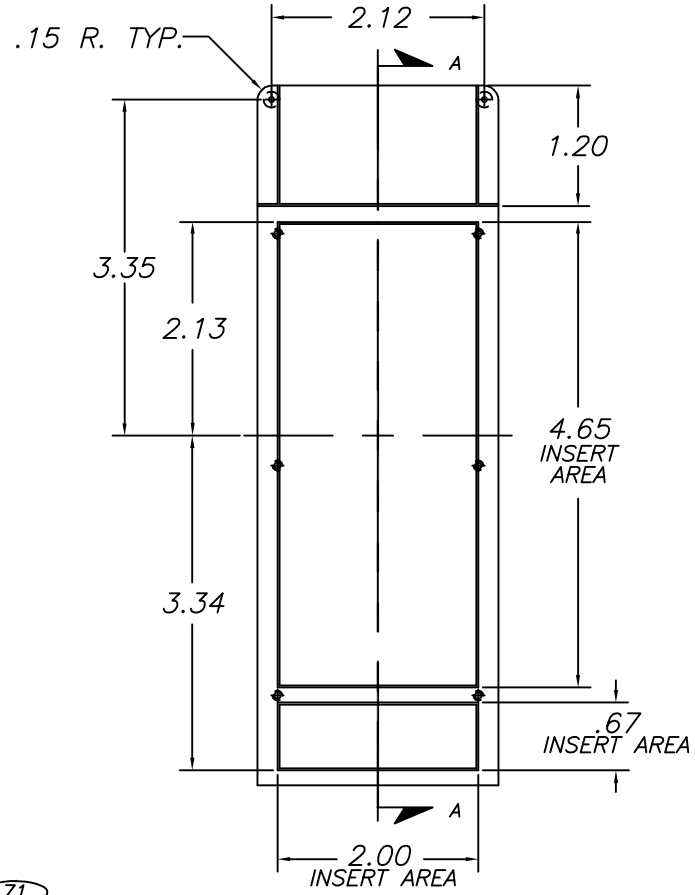

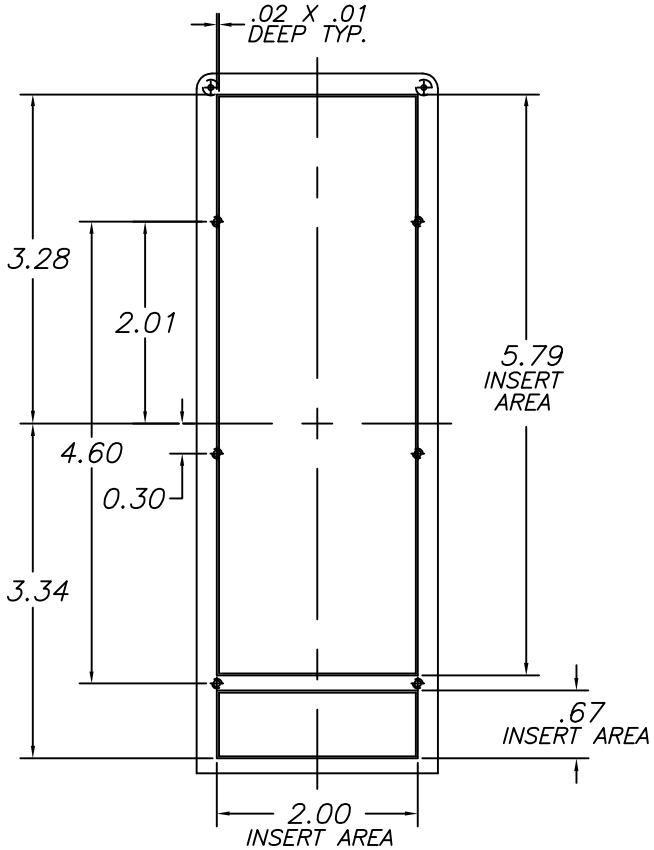

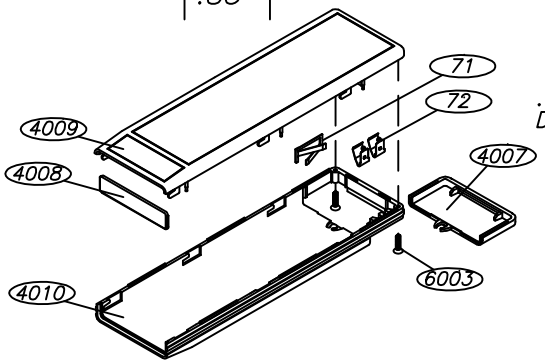

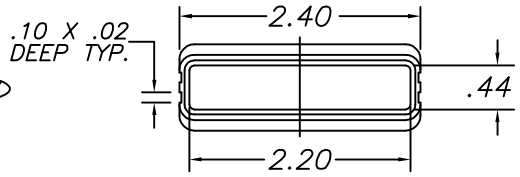

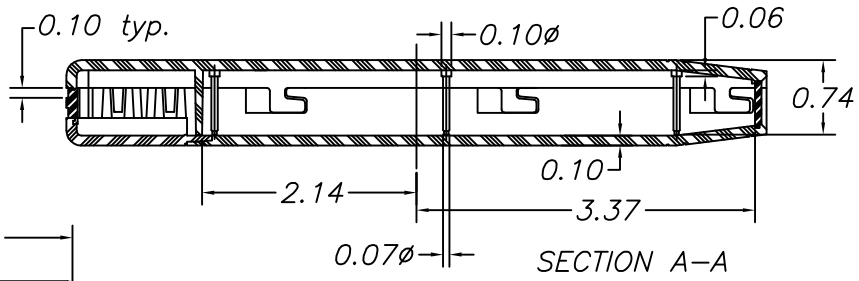

10–26–98

ALL DIMENSIONS ± .010

PART NO.	DESCRIPTION	ACCESSORIES	
4009	PLASTIC TOP	PART NO.	DESCRIPTION
4008	PLASTIC FACE PLATE		
4010	PLASTIC BOTTOM	4008CL	CLEAR FACE PLATE
71	9V BATTERY CONTACT OPTION	4008IR	INFARED FACE PLATE
72	AA BATTERY CONTACT OPTION	4008R	RED FACE PLATE
4007	PLASTIC BATTERY COVER	1030	PLASTIC POCKET CLIP
6003	SCREWS		

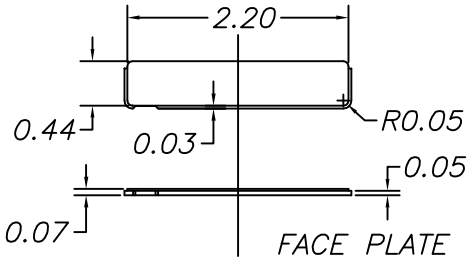

619 Commercial Ave. Covina, CA 91723
(626) 331-0517 Fax (626) 331-8584 http://www.serpac.com.